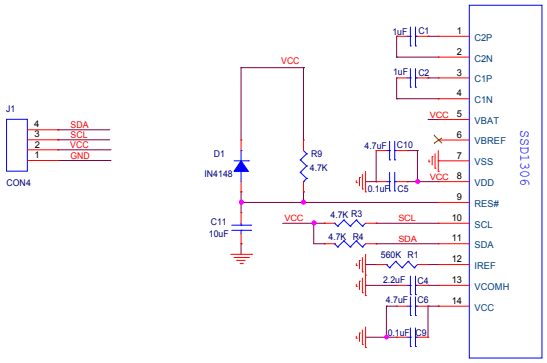
J1
4 SDA
3 SCL
2 VCC
1 GND
CON4
VCC
D1
IN4148
R9
4.7K
C11
10uF
1uF C1
1uF C2
4.7uF C10
0.1uF C5
VCC
4.7K R3
4.7K R4
SCL
SDA
560K R1
2.2uF C4
4.7uF C6
0.1uF C9
1 C2P
2 C2N
3 C1P
4 C1N
5 VBAT
6 VBREF
7 VSS
8 VDD
9 RES#
10 SCL
11 SDA
12 IREF
13 VCOMH
14 VCC
SSD1306